REV.	DESCRIPTION	ECN NO.	NAME	DATE
A0	Change in performance	N/A	lihemin	2017-07-13
A1	ADD THE COVER	ECN1801017	ZBJ	2018-01-17
A2	NEW FRAME	N/A	HRWEI	2020-06-24

RoHS

ALL PARTS MUST MEET TO RoHS REQUIREMENTS

1. CONTACT PIN TO SOLDER
2. CRIMPED FERRULE HEX. CRIMP SIZE .133"

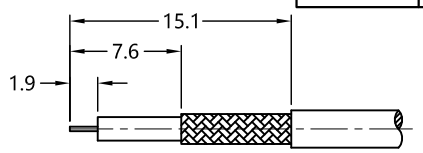

RECOMMENDED CABLE STRIPPING DIM'S

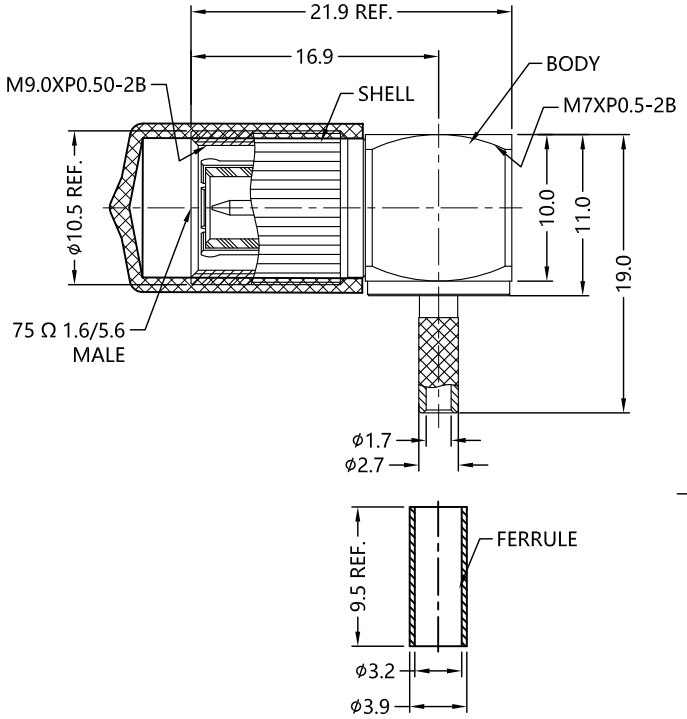

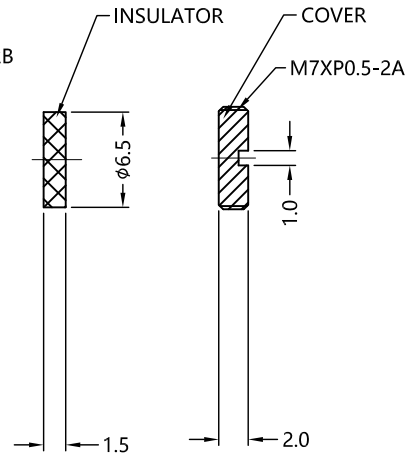

MATERIALS AND PLATING UNIT: MICRO-INCHES

PART NAME	MATERIALS	PLATING
BODY/SHELL	BRASS C3604	NICKEL 100 u" / COPPER
INSULATOR	PTFE ASTM-D-1710	N/A
CONTACT PIN	BRASS C3604	GOLD 3 u" / NICKEL/COPPER
FERRULE	BRASS	NICKEL 100 u" / COPPER
COVER	BRASS C3604	NICKEL 100 u" / COPPER

ELECTRICAL CHARACTERISTICS

IMPEDANCE		75 Ω
VOLTAGE RATING		335 V(rms)
FREQUENCY RANGE		0 ~ 1 GHz
DIELECTRIC WITHSTANDING VOLTAGE		>1000 V
CONTACT RESISTANCE	CENTER CONTACT	<4.0 mΩ
	OUTER CONTACT	<2.0 mΩ
INSULATION RESISTANCE		>1000 MΩ
INSERTION LOSS		N/A
VSWR		<1.4
3RD INTERMODULATION		N/A

MECHANICAL CHARACTERISTICS

FORCE TO ENGAGE AND DISENGAGE	N/A
CENTER CONTACT RETENTION FORCE	>6.0 lbs
RECOMMENDED COUPLING TORQUE	N/A
COUPLING NUT RETENTION FORCE	N/A
DURABILITY	>500cycles

ENVIRONMENTAL PARAMETER

TEMPERATURE RANGE	-40 ℃~+125 ℃

* CUSTOMER OUTLINE DRAWING

UNLESS OTHERWISE SPECIFIED:
1) EDGES : C0.15 MAX ;
2) REMOVE ALL BURRS ;
3) SURFACE ROUGHNESS : Ra1.6 ;
4) UNITS : mm ;
5) DIMENSIONS TOLERANCES
DECIMALS : .x ±0.3 .xx ±0.2 .xxx±0.1;
ANGLES : ± 5°.

THIRD ANGLE PROJECTION

APPROVED :	CUSTOMER P/N : -
CHECKED :	SCALE : 2 : 1
DRAWING :	DATE : 2020-06-24
	PAGE : 1/1

SLK SUPERLINK

TITLE : 1.6/5.6 MALE R/A Crimp FOR RG179 CABLE,75Ω

DRAWING NO. : 7A5M11R-A01

COMPANY WEBSITE : www.slkcorp.com