REV.	DESCRIPTION	ECN NO.	NAME	DATE
1	NEW FRAME	N/A	JING	2020-08-20

ALL PARTS MUST MEET TO RoHS REQUIREMENTS

REMARKS:
1. ADDS SIZE:11.0mm
2. CONTACT PIN TO SOLDER

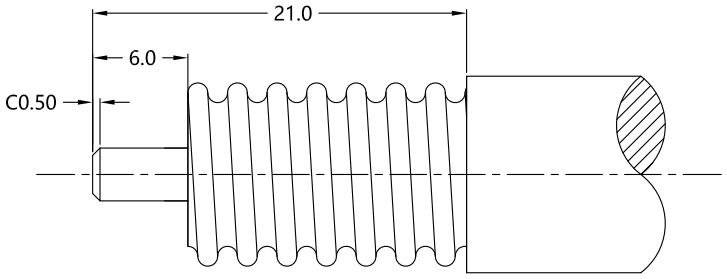

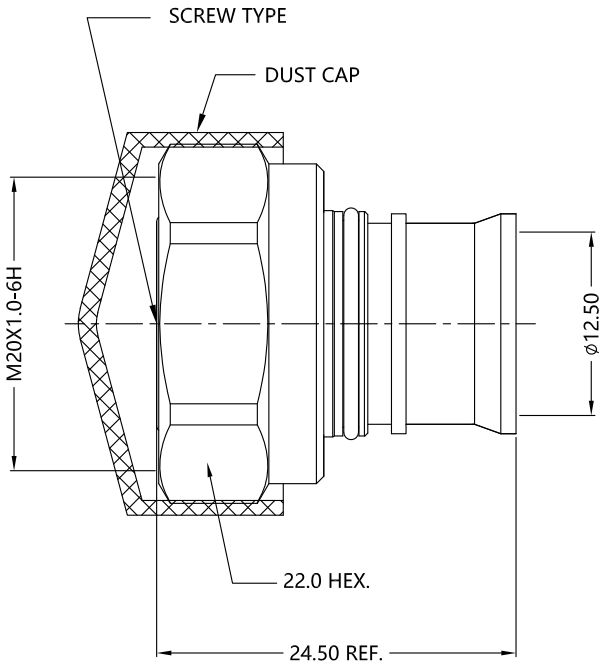

RECOMMENDED CABLE STRIPPING DIM'S

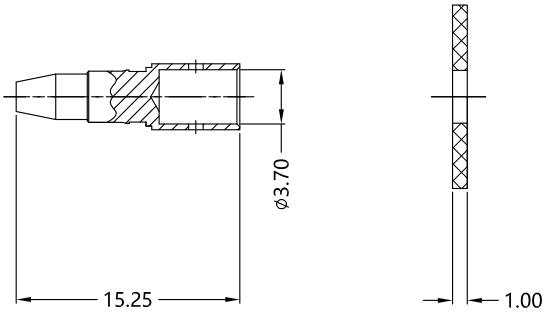

MATERIALS AND PLATING UNIT: MICRO-INCHES		
PART NAME	MATERIALS	PLATING
BODY	BRASS C3604	ALBALOY 80u"/COPPER
INSULATOR	PTFE ASTM-D-1710	N/A
CONTACT PIN	BRASS	SILVER 200"/COPPER
GASKET	SILICONE	N/A
SHELL	BRASS	NICKEL200 u''/COPPER

ELECTRICAL CHARACTERISTICS		
IMPEDANCE		50 Ω
VOLTAGE RATING		500 V(rms)
FREQUENCY RANGE		0 ~ 6 GHz
DIELECTRIC WITHSTANDING VOLTAGE		>750 V
CONTACT RESISTANCE	CENTER CONTACT	<1.0 mΩ
	OUTER CONTACT	<0.25 mΩ
INSULATION RESISTANCE		>5000 MΩ
INSERTION LOSS		According to the cable
RF-LEAKAGE		N/A
VSWR		<1.35
3RD INTERMODULATION		≤-155dBc@900MHz& 1800MHz@2x43dBm

MECHANICAL CHARACTERISTICS	
FORCE TO ENGAGE AND DISENGAGE	N/A
CENTER CONTACT RETENTION FORCE	N/A
RECOMMENDED COUPLING TORQUE	44 in-lbs
COUPLING NUT RETENTION FORCE	>100 lbs
DURABILITY	>500 cycles

ENVIRONMENTAL PARAMETER	
TEMPERATURE RANGE	-55 ℃~+125 ℃

* CUSTOMER OUTLINE DRAWING

UNLESS OTHERWISE SPECIFIED:
1) EDGES : C0.15 MAX ;
2) REMOVE ALL BURRS ;
3) SURFACE ROUGHNESS : Ra1.6 ;
4) UNITS : mm ;
5) DIMENSIONS TOLERANCES
DECIMALS : .x ±0.3 .xx ±0.2 .xxx±0.1;
ANGLES : ± 5°.

THIRD ANGLE PROJECTION

APPROVED :	CUSTOMER P/N : -
CHECKED :	SCALE : 2: 1
DRAWING : JING	DATE : 2020-08-20
	PAGE : 1/1

SUPERLINK

TITLE : 4.3-10 MALE S/T FOR 1/2" SUPER FLEXIBLE CABLE , 50Ω

DRAWING NO. : 5SDM15S-LS12

COMPANY WEBSITE : www.slkcorp.com