REV	DESCRIPTION	ECN NO	NAME	DATE
0	FIRST EDITION	N/A	WANG	2018-06-11
1	NEW FRAME	N/A	Liu	2020-07-04

ALL PARTS MUST MEET TO RoHS REQUIREMENTS

REMARKS:
1. CONTACT PIN TO CAPTIVE
2. FERRULE TO SOLDER
3. ADD SIZE : 11.7 mm

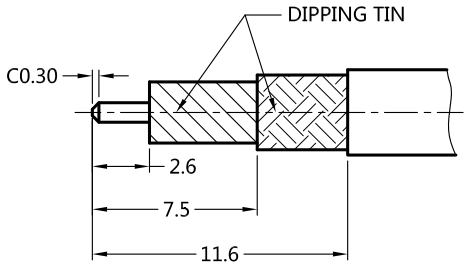

RECOMMENDED CABLE STRIPPING DIM'S

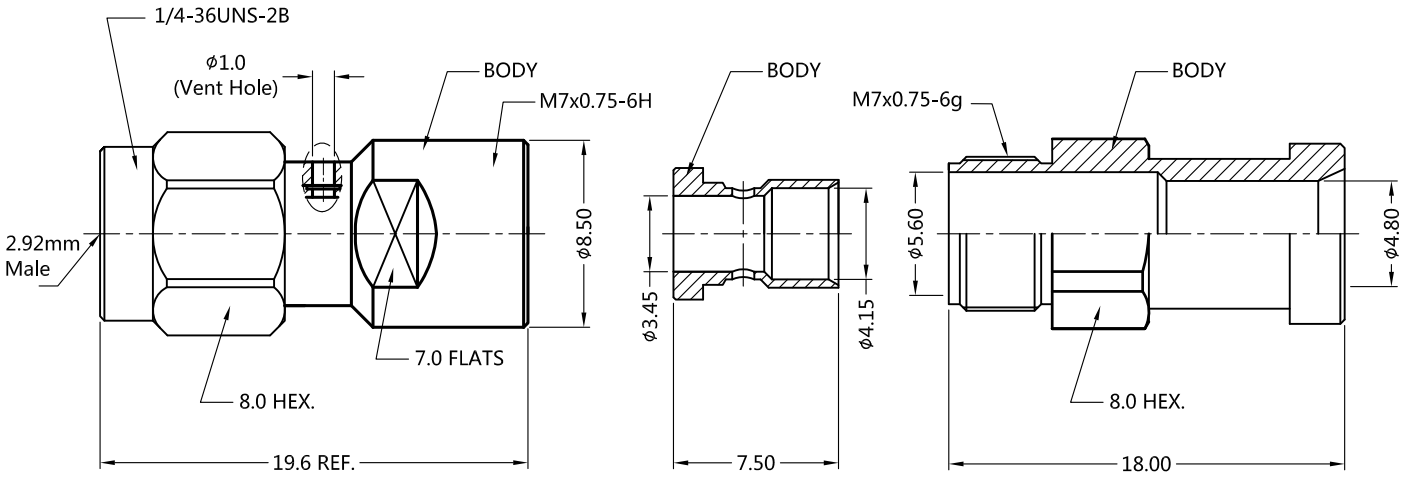

MATERIALS AND PLATING		UNIT: MICRO-INCHES
BODY/SHELL	STAINLESS STEEL	PASSIVATION
CONTACT PIN	Be-Cu C17300	GOLD 50 u"/COPPER
INSULATOR	PEI	N/A
BARREL	STAINLESS STEEL	PASSIVATION
FERRULE	BRASS C3604	GOLD 10 u"/NICKEL/COPPER

ELECTRICAL CHARACTERISTICS		
IMPEDANCE		50 Ω
VOLTAGE RATING		335 V(rms)
FREQUENCY RANGE		DC~35 GHz
DIELECTRIC WITHSTANDING VOLTAGE		>1000 V
CONTACT RESISTANCE	CENTER CONTACT	<3.0 mΩ
	OUTER CONTACT	<2.0 mΩ
INSULATION RESISTANCE		>5000 MΩ
INSERTION LOSS		<0.05√F dB
VSWR		<1.30
3RD INTERMODULATION		N/A

MECHANICAL CHARACTERISTICS	
FORCE TO ENGAGE AND DISENGAGE	N/A
CENTER CONTACT RETENTION FORCE	>6 lbs
RECOMMENDED COUPLING TORQUE	7~10 in-lbs
COUPLING NUT RETENTION FORCE	>60 lbs
DURABILITY	>500 cycles

ENVIRONMENTAL CHARACTERISTICS	
TEMPERATURE RANGE	-40 ℃~+125 ℃
THERMAL SHOCK	MIL- STD 202, Meth. 107,Cond. B
VIBRATION	MIL- STD 202, Meth. 204,Cond. D
SHOCK	MIL- STD 202, Meth. 213,Cond. I

* CUSTOMER OUTLINE DRAWING

UNLESS OTHERWISE SPECIFIED:
1) C0.15 MAX;
2) REMOVE ALL BURRS;
3) SURFACE ROUGHNESS : Ra1.6;
4) UNITS:mm;
5) DIMENSIONS TOLERANCES
DECIMALS .x ±0.3 .xx ±0.2 .xxx±0.1
ANGLES ±5°

THIRD ANGLE PROJECTION

APPROVED:	CUSTOMER P/N: -
CHECKED:	SCALE: 1:1
DRAWING:	DATE: 2020-07-04

SUPERLINK

TITLE: 2.92mm MALE S/T CLAMP WITH VENT HOLE FOR SFT-142 CABLE,50Ω

DRAWING NO: 5P9M15S-A87-003

COMPANY WEBSITE: www.slkcorp.com