REV.	DESCRIPTION	ECN NO.	NAME	DATE
0	FIRST EDITION	N/A	YY	2016-10-09
1	NEW FRAME	N/A	JING	2020-05-27

ALL PARTS MUST MEET TO RoHS REQUIREMENTS

MARK: 1. CONTCT PIN IS CAPTIVE
2. HEX. CRIMP SIZE 256"

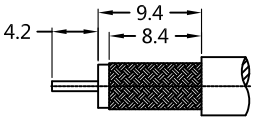

RECOMMENDED
CABLE STRIPPING DIM'S

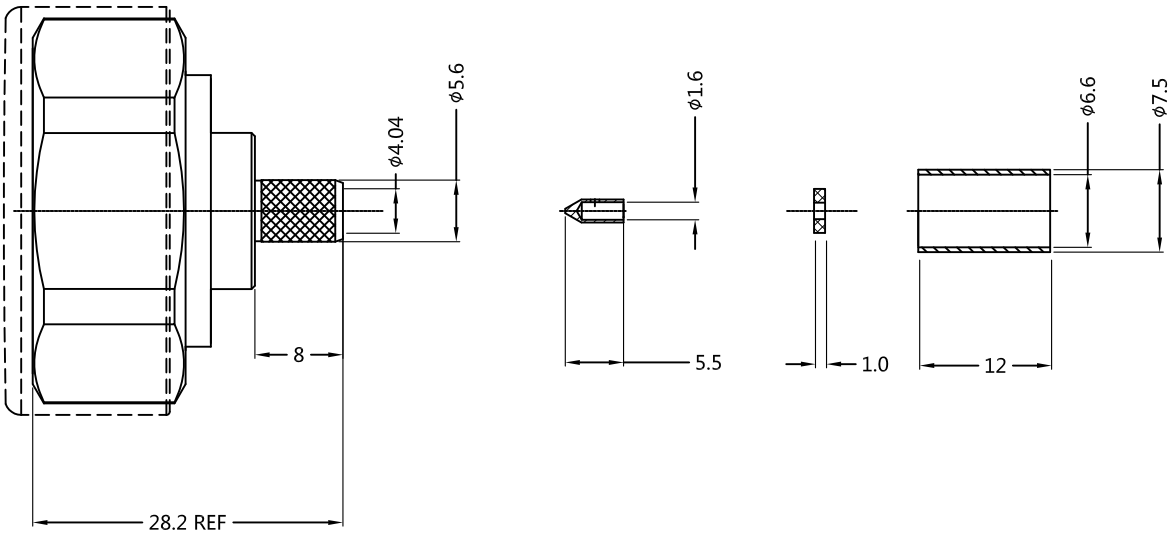

MATERIALS AND PLATING UNIT: MICRO-INCHES

PART NAME	MATERIALS	PLATING
BODY	BRASS	ALBALOY 80u"/COPPER
INSULATOR	TEFLON	N/A
CONTACT PIN	PHOSPHOR BRONZE	SILVER 200"/COPPER
FERRULE	BRASS	ALBALOY 80u"/COPPER

ELECTRICAL CHARACTERISTICS

IMPEDANCE		50 Ω
VOLTAGE RATING		1000 V(rms)
FREQUENCY RANGE		0 ~ 2.5 GHz
DIELECTRIC WITHSTANDING VOLTAGE		>1500 V
CONTACT RESISTANCE	CENTER CONTACT	<1.5 mΩ
	OUTER CONTACT	<1.0 mΩ
INSULATION RESISTANCE		>5000 MΩ
INSERTION LOSS		ACCORDING AS THE CABLE
RF-LEAKAGE		N/A
VSWR		<1.3

MECHANICAL CHARACTERISTICS

FORCE TO ENGAGE AND DISENGAGE	N/A
CENTER CONTACT RETENTION FORCE	45 lbs
RECOMMENDED COUPLING TORQUE	221 in-lbs
COUPLING NUT RETENTION FORCE	225 lbs
DURABILITY	>500 cycles

ENVIRONMENTAL PARAMETER

TEMPERATURE RANGE	-55 ℃~+155 ℃
THERMAL SHOCK	MIL- STD 202, Meth. 107,Cond. B
VIBRATION	MIL- STD 202, Meth. 204,Cond. B
SHOCK	MIL- STD 202, Meth. 213,Cond. I
CLIMATIC CLASS	IEC 60068 65 / 165 / 21

* CUSTOMER OUTLINE DRAWING

UNLESS OTHERWISE SPECIFIED:
1) EDGES : C0.15 MAX ;
2) REMOVE ALL BURRS ;
3) SURFACE ROUGHNESS : Ra1.6 ;
4) UNITS : mm ;
5) DIMENSIONS TOLERANCES
DECIMALS : .x ±0.3 .xx ±0.2 .xxx±0.1;
ANGLES : ± 5°.

THIRD ANGLE PROJECTION

APPROVED :	CUSTOMER P/N : -
CHECKED :	SCALE : 3 : 2
DRAWING : JING	DATE : 2020-05-27
	PAGE : 1/1

SUPERLINK

TITLE : 716 MALE ST CRIMPCONNECTOR FOR LMR240-UF CABLE

DRAWING NO. : 5A7M11S-A46

COMPANY WEBSITE : www.slkcorp.com